UT320 / UT340
Pulser Receiver

Connection Diagrams

UTEX SCIENTIFIC INSTRUMENTS INC.
2319 Dunwin Drive, Unit 8
Mississauga, Ontario L5L 1A3
Canada

Tel (905) 828-1313
Fax (905) 828-0360
E-mail: support@utex.com
Web Site: www.utex.com

Copyright © 2002 UTEX Scientific Instruments Inc.
All Rights Reserved

UT Instrument - Oscilloscope connections for: Pulse Echo Mode

Before proceeding, read "Warnings" section in the Users Manual

Always stop the pulser before connecting or disconnecting transducer cables

Never connect the pulser output (PULSE/REC) directly to the input of other instruments

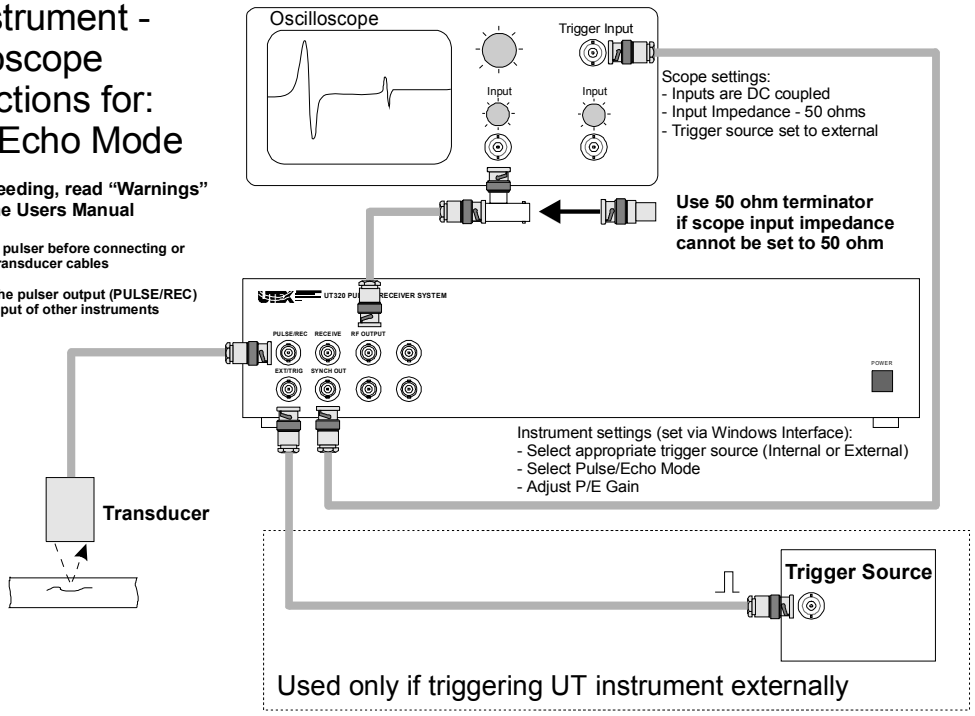

UT Instrument - Digitizer Card connections for: Pulse Echo Mode

Before proceeding, read "Warnings" section in the Users Manual

Always stop the pulser before connecting or disconnecting transducer cables

Never connect the pulser output (PULSE/REC) directly to the input of other instruments

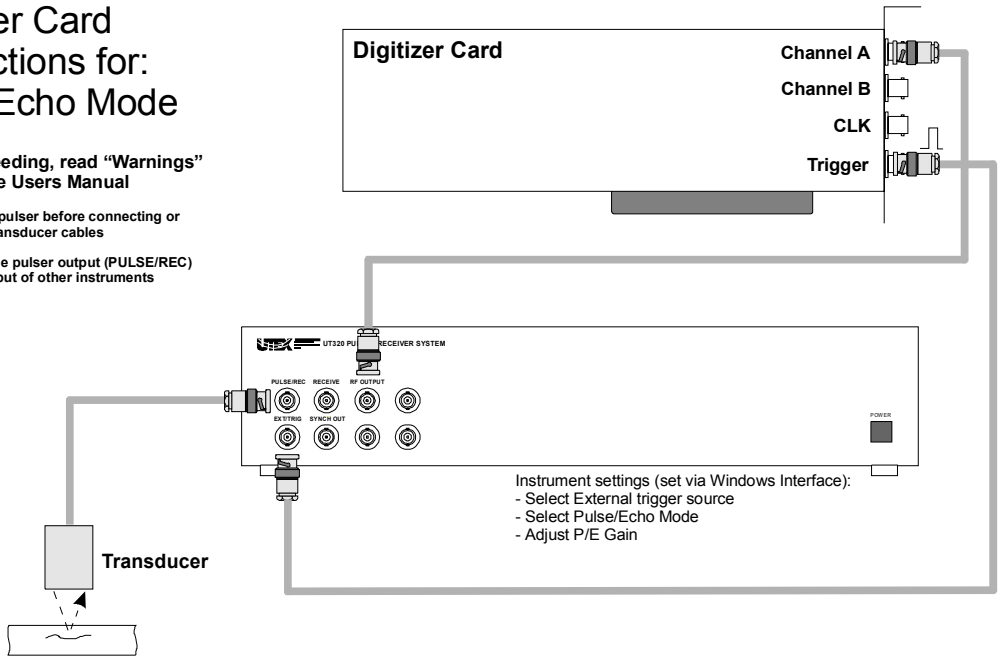

 © 2002

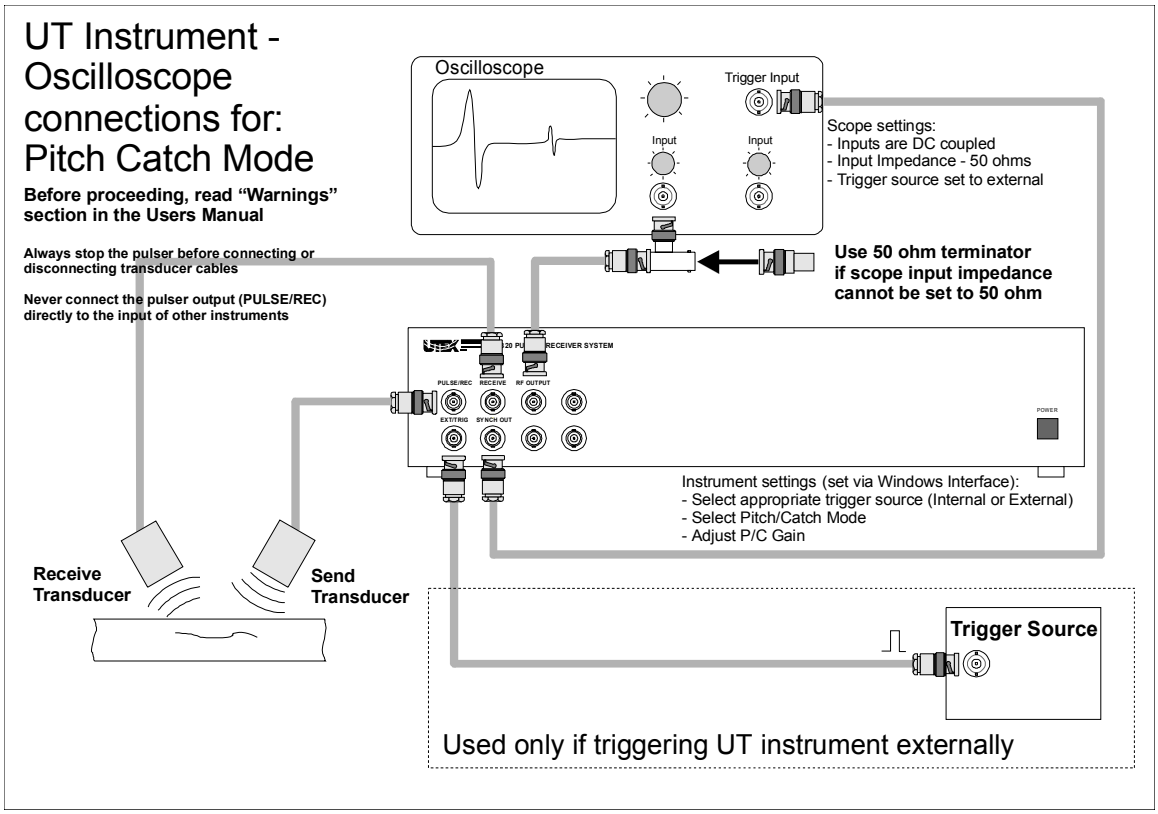
UT Instrument - Oscilloscope connections for: Pitch Catch Mode
Before proceeding, read "Warnings" section in the Users Manual
Always stop the pulser before connecting or disconnecting transducer cables
Never connect the pulser output (PULSE/REC) directly to the input of other instruments
Oscilloscope
Trigger Input
Input
Input
Scope settings:
- Inputs are DC coupled
- Input Impedance - 50 ohms
- Trigger source set to external
Use 50 ohm terminator if scope input impedance cannot be set to 50 ohm
RECEIVER SYSTEM
PULSE/REC
RECEIVE
RF OUTPUT
EXT/TRIG
SYNCH OUT
POWER
Instrument settings (set via Windows Interface):
- Select appropriate trigger source (Internal or External)
- Select Pitch/Catch Mode
- Adjust P/C Gain
Receive Transducer
Send Transducer
Trigger Source
Used only if triggering UT instrument externally

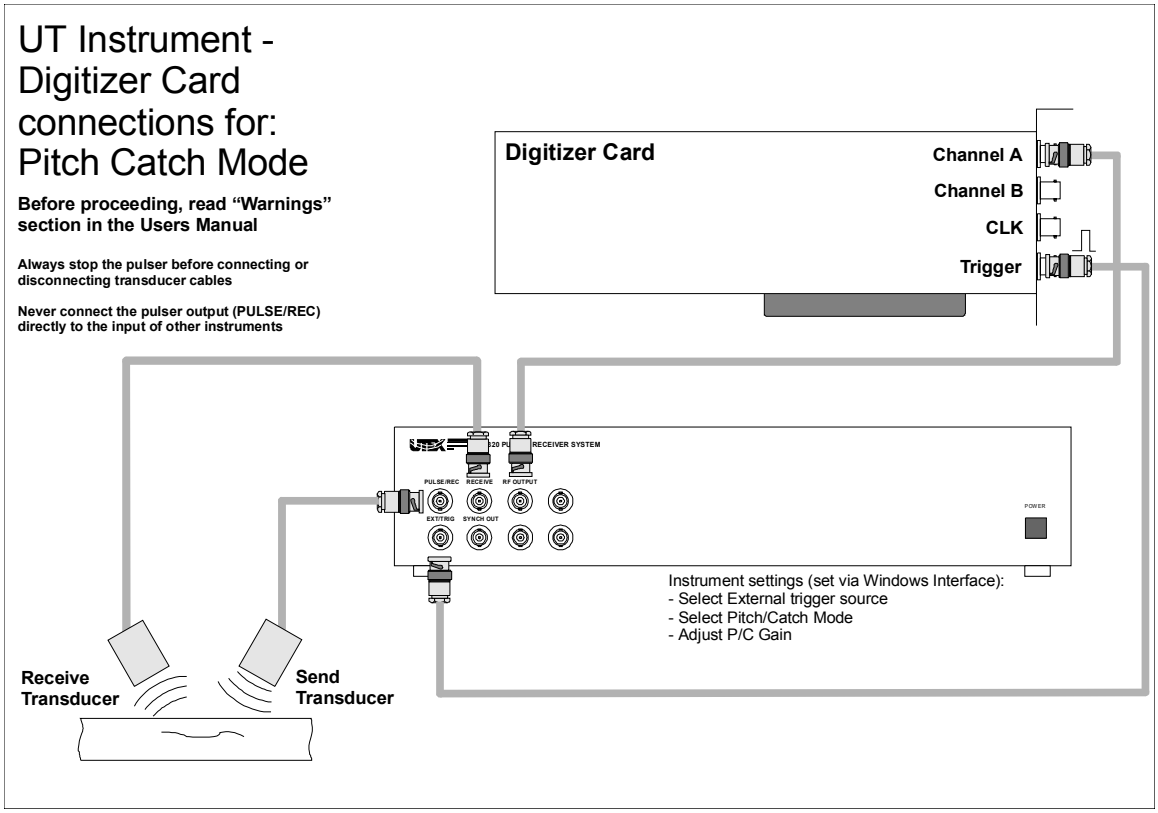
UT Instrument - Digitizer Card connections for: Pitch Catch Mode
Before proceeding, read "Warnings" section in the Users Manual
Always stop the pulser before connecting or disconnecting transducer cables
Never connect the pulser output (PULSE/REC) directly to the input of other instruments
Digitizer Card
Channel A
Channel B
CLK
Trigger
RECEIVER SYSTEM
PULSE/REC
RECEIVE
RF OUTPUT
EXT/TRIG
SYNCH OUT
POWER
Instrument settings (set via Windows Interface):
- Select External trigger source
- Select Pitch/Catch Mode
- Adjust P/C Gain
Receive Transducer
Send Transducer

UT Instrument - Oscilloscope connections for: Pulse Echo Mode

Before proceeding, read "Warnings" section in the Users Manual

Always stop the pulser before connecting or disconnecting transducer cables

Never connect the pulser output (PULSE/REC) directly to the input of other instruments

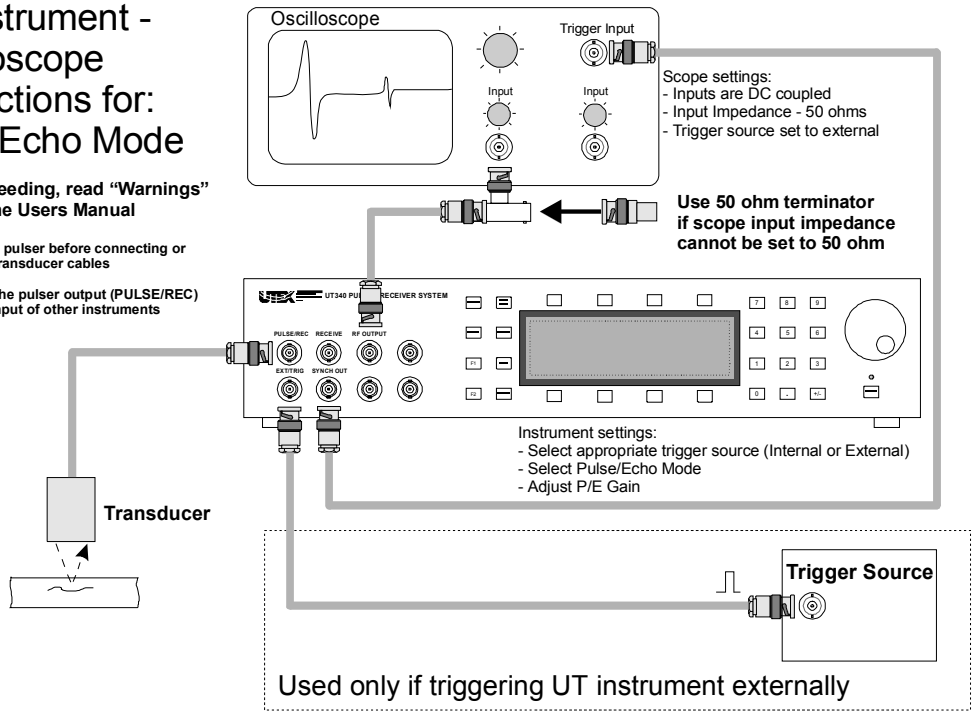

UT Instrument - Digitizer Card connections for: Pulse Echo Mode

Before proceeding, read "Warnings" section in the Users Manual

Always stop the pulser before connecting or disconnecting transducer cables

Never connect the pulser output (PULSE/REC) directly to the input of other instruments

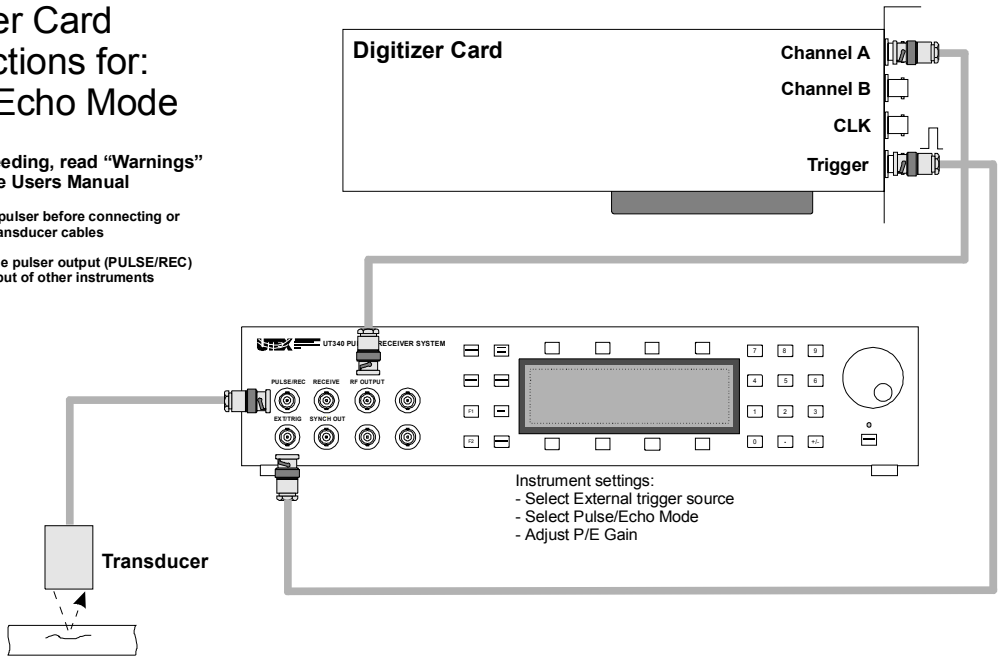

 © 2002

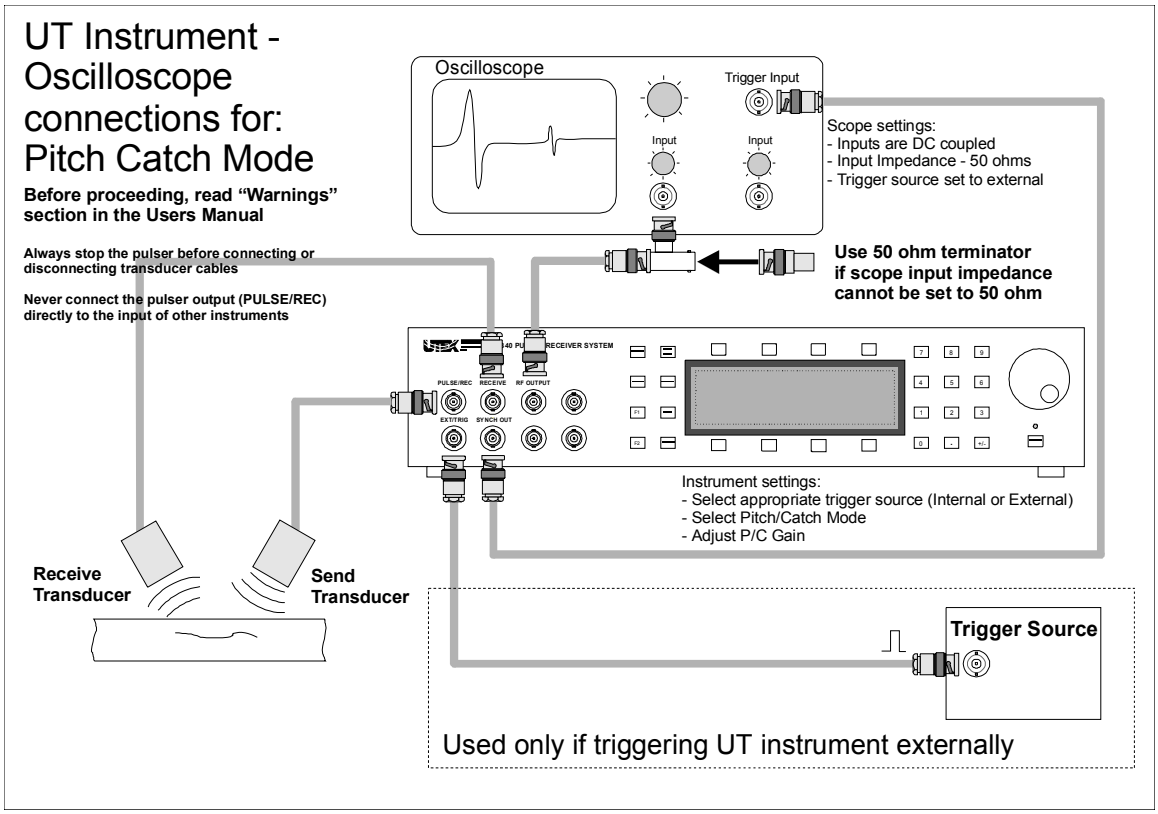
UT Instrument - Oscilloscope connections for: Pitch Catch Mode
Before proceeding, read "Warnings" section in the Users Manual
Always stop the pulser before connecting or disconnecting transducer cables
Never connect the pulser output (PULSE/REC) directly to the input of other instruments
Oscilloscope
Trigger Input
Input
Input
Scope settings:
- Inputs are DC coupled
- Input Impedance - 50 ohms
- Trigger source set to external
Use 50 ohm terminator if scope input impedance cannot be set to 50 ohm
RECEIVER SYSTEM
PULSE/REC
RECEIVE
RF OUTPUT
EXT/TRIG
SYNCH OUT
Instrument settings:
- Select appropriate trigger source (Internal or External)
- Select Pitch/Catch Mode
- Adjust P/C Gain
Receive Transducer
Send Transducer
Trigger Source
Used only if triggering UT instrument externally

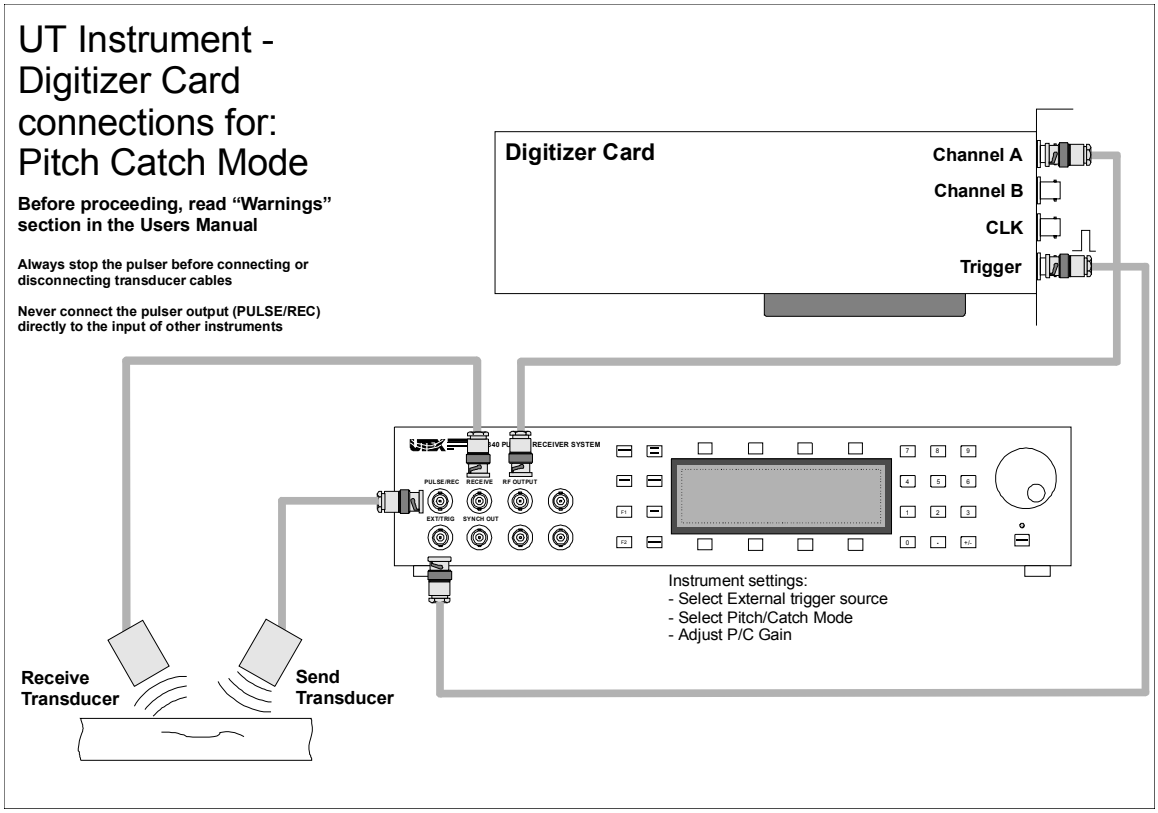
UT Instrument - Digitizer Card connections for: Pitch Catch Mode
Before proceeding, read "Warnings" section in the Users Manual
Always stop the pulser before connecting or disconnecting transducer cables
Never connect the pulser output (PULSE/REC) directly to the input of other instruments
Digitizer Card
Channel A
Channel B
CLK
Trigger
RECEIVER SYSTEM
PULSE/REC
RECEIVE
RF OUTPUT
EXT/TRIG
SYNCH OUT
Instrument settings:
- Select External trigger source
- Select Pitch/Catch Mode
- Adjust P/C Gain
Receive Transducer
Send Transducer

 © 2002

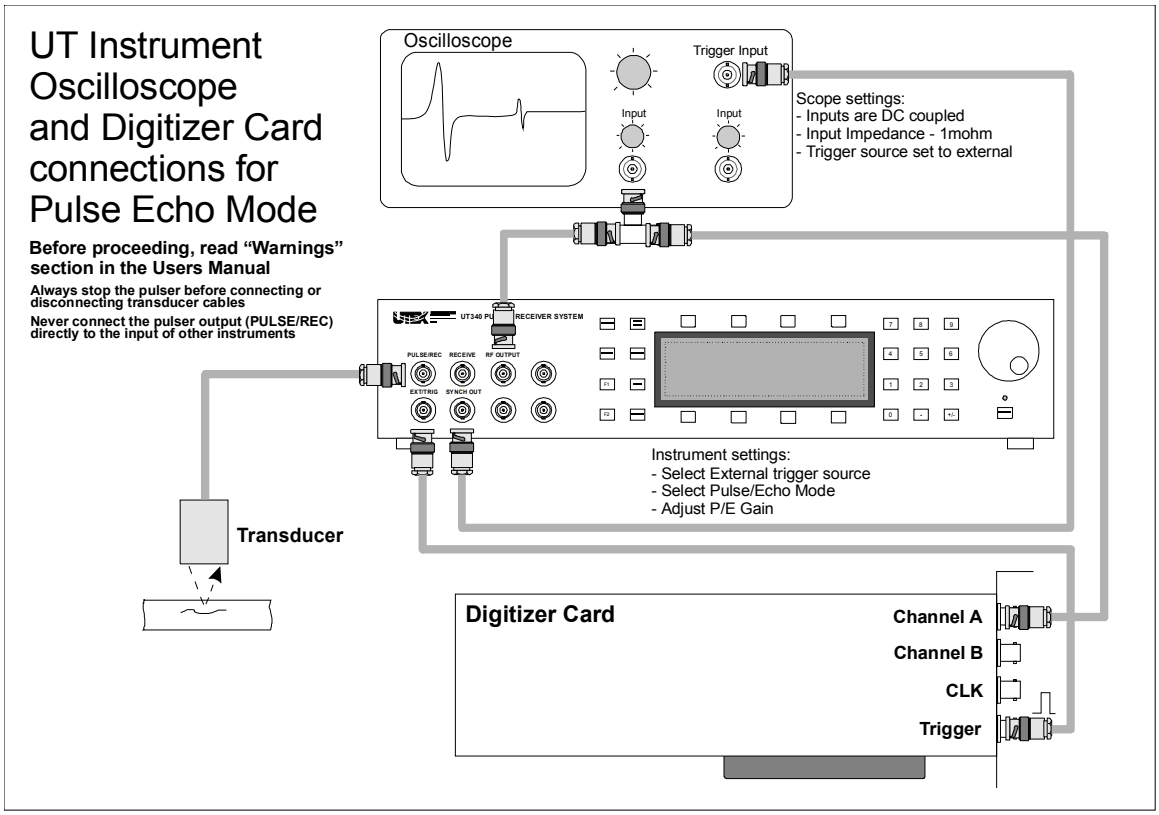
UT Instrument Oscilloscope and Digitizer Card connections for Pulse Echo Mode
Before proceeding, read "Warnings" section in the Users Manual
Always stop the pulser before connecting or disconnecting transducer cables
Never connect the pulser output (PULSE/REC) directly to the input of other instruments
Oscilloscope
Trigger Input
Input
Input
Scope settings:
- Inputs are DC coupled
- Input Impedance - 1mohm
- Trigger source set to external
RECEIVER SYSTEM
PULSE/REC
RECEIVE
RF OUTPUT
EXT/TRIG
SYNCH OUT
Instrument settings:
- Select External trigger source
- Select Pulse/Echo Mode
- Adjust P/E Gain
Transducer
Digitizer Card
Channel A
Channel B
CLK
Trigger

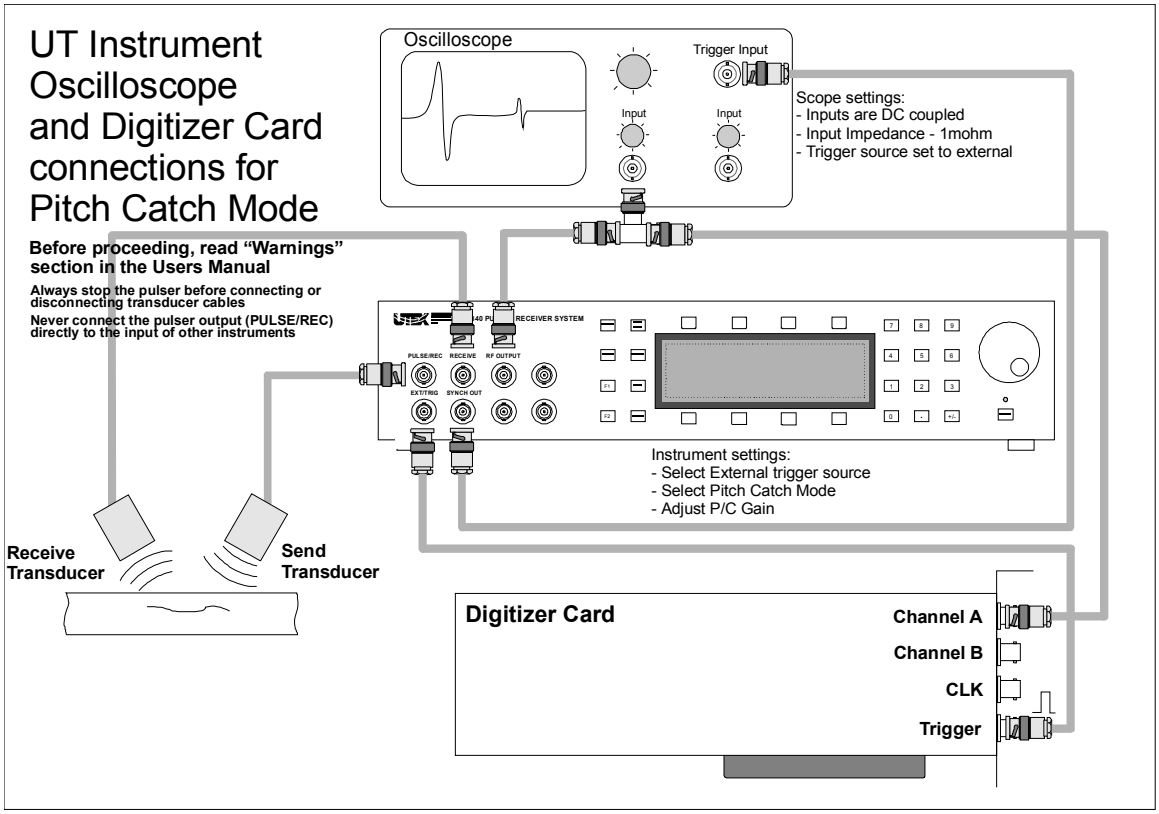
UT Instrument Oscilloscope and Digitizer Card connections for Pitch Catch Mode
Before proceeding, read "Warnings" section in the Users Manual
Always stop the pulser before connecting or disconnecting transducer cables
Never connect the pulser output (PULSE/REC) directly to the input of other instruments
Oscilloscope
Trigger Input
Input
Input
Scope settings:
- Inputs are DC coupled
- Input Impedance - 1mohm
- Trigger source set to external
RECEIVER SYSTEM
PULSE/REC
RECEIVE
RF OUTPUT
EXT/TRIG
SYNCH OUT
Instrument settings:
- Select External trigger source
- Select Pitch Catch Mode
- Adjust P/C Gain
Receive Transducer
Send Transducer
Digitizer Card
Channel A
Channel B
CLK
Trigger

 © 2002